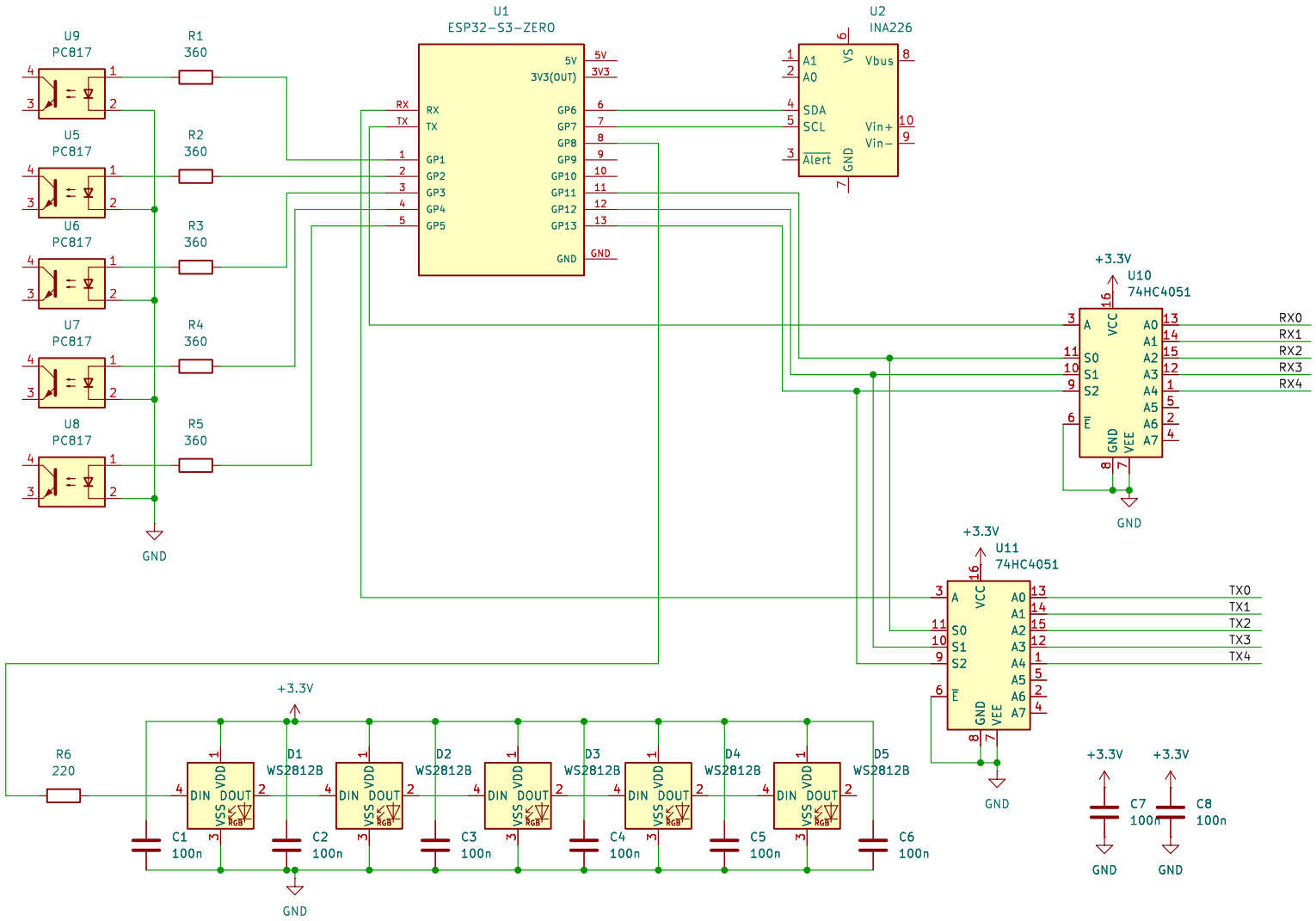

TComLab

Sheet: /

File: watch-watchkicad_pro.kicad_sch

Title: Watch-Watch

Size: A4	Date: 2025-12-15	**Rev: v0.1**
KiCad E.D.A. 9.0.0		Id: 1/1